COPYRIGHT AND CONFIDENTIAL
The information on this document is the property of BHARAT HEAVY ELECTRICALS LIMITED
It must not be used in any way detrimental to the interest of the Company

DO NOT SCALE. IF IN DOUBT, ASK.

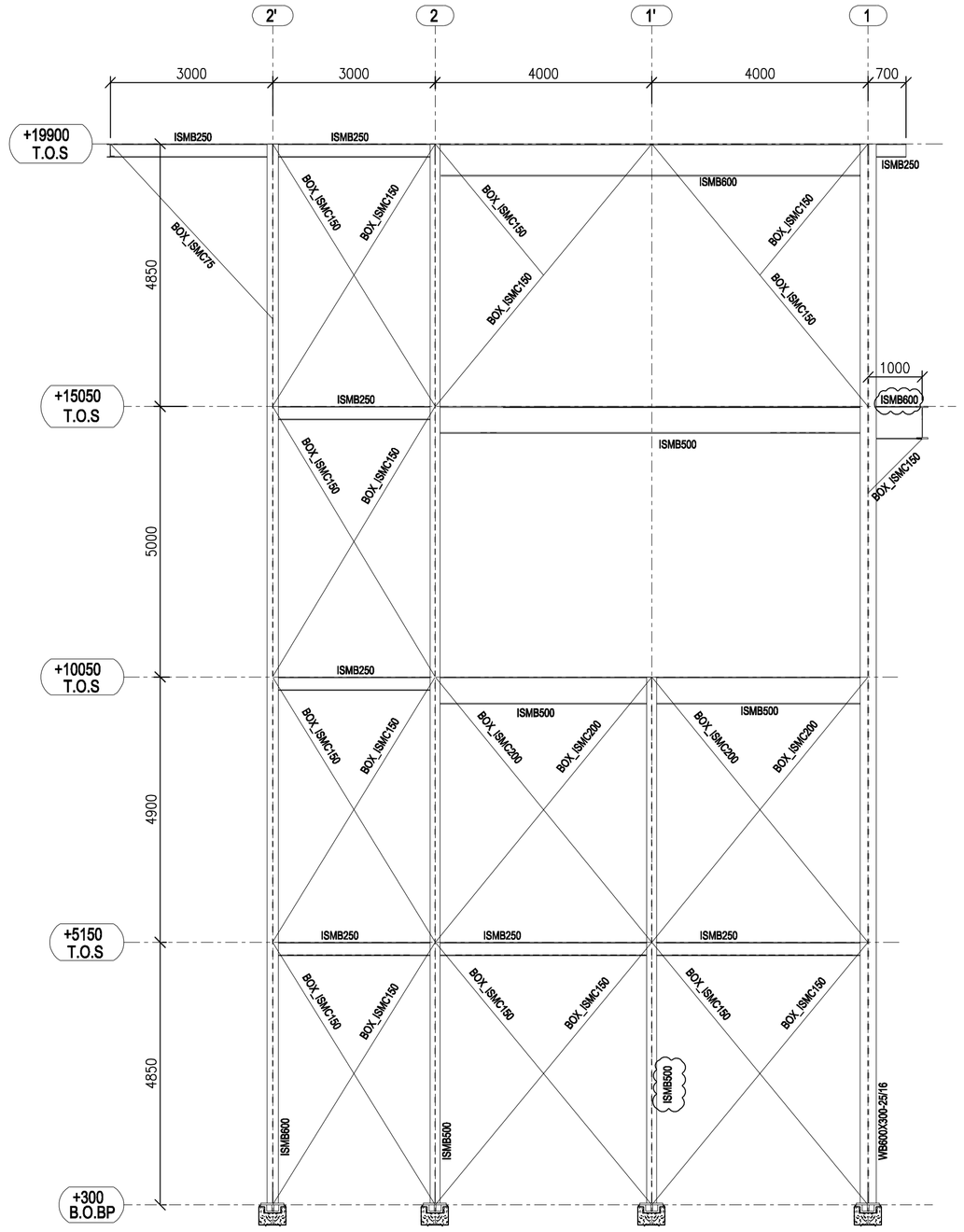

ELEVATION ALONG GRID @ A

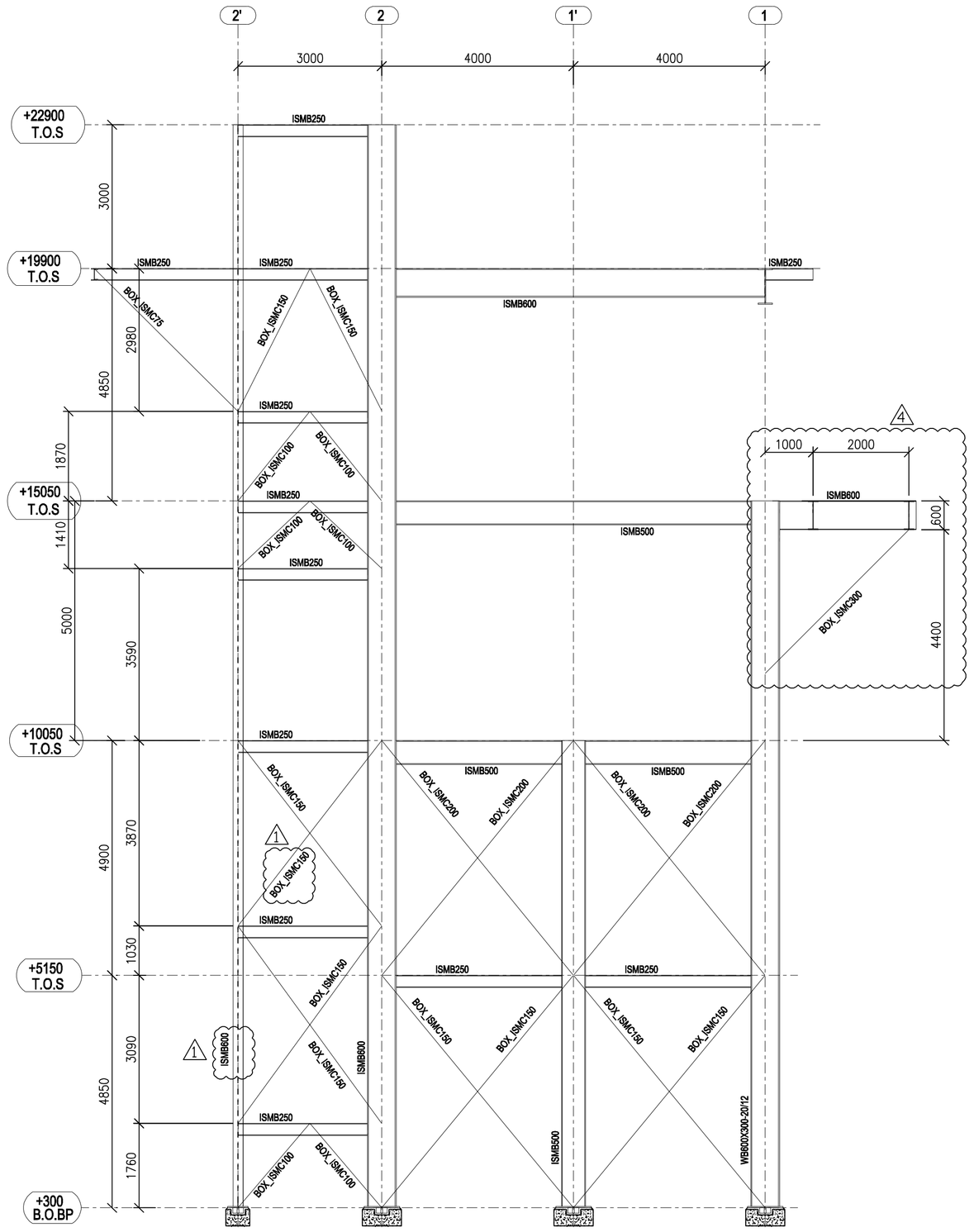

ELEVATION ALONG GRID @ A'

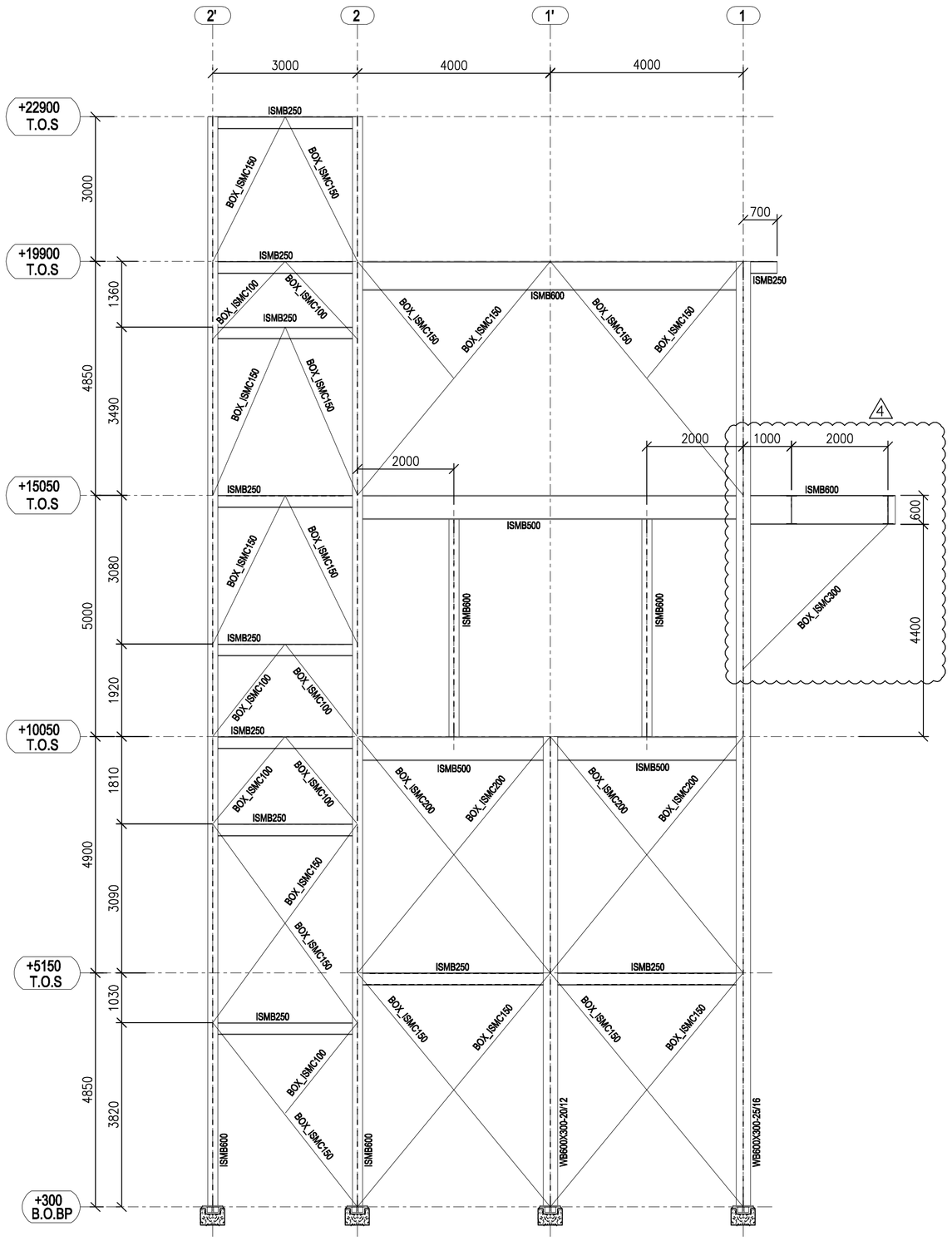

ELEVATION ALONG GRID @ B

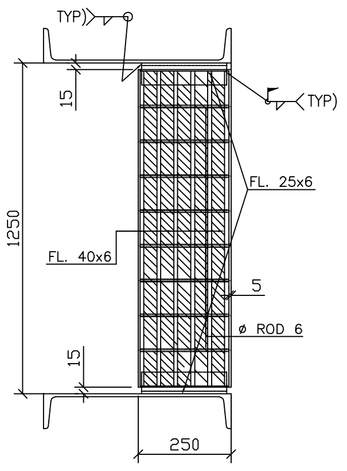

SECTION 2-2 3

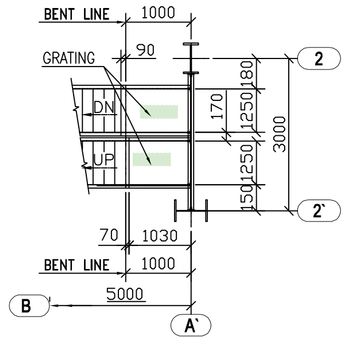

SECTION 3-3 3

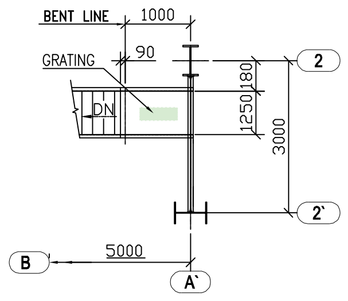

SECTION 7-7 3

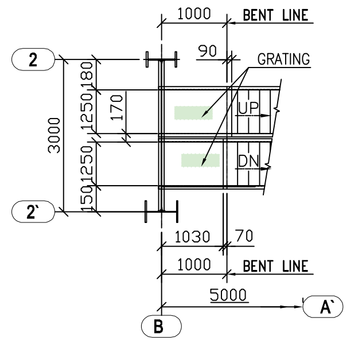

SECTION 6-6 3

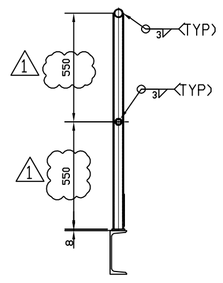

SECTION 5-5

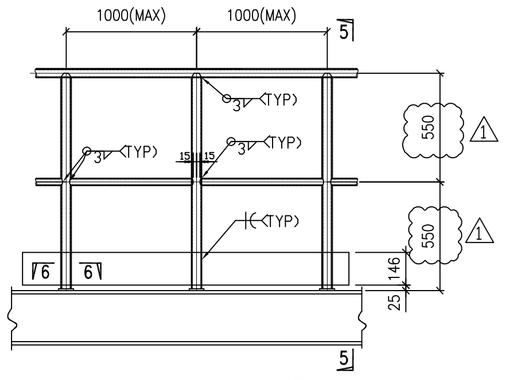

TYP. DETAIL OF HANDRAIL

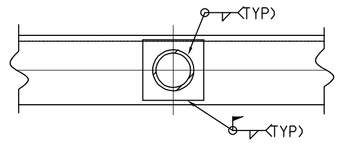

PLAN 6-6

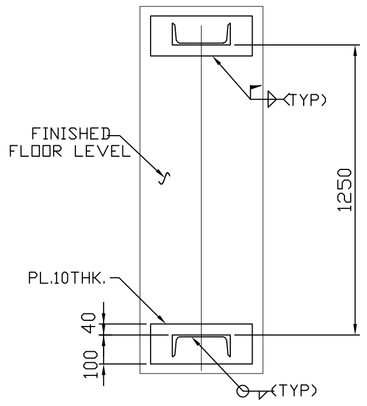

SECTION 1-1 3

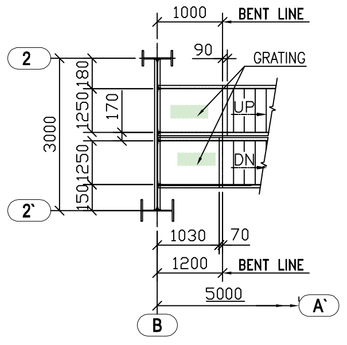

SECTION 4-4 3

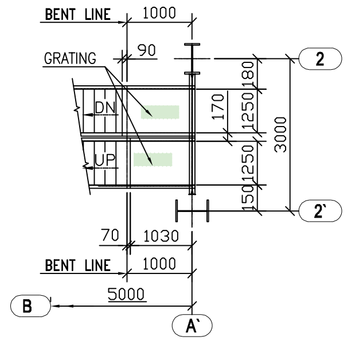

SECTION 5-5 3

NOTES:-

1. THIS DRAWING SHALL BE READ IN CONJUNCTION WITH CONTRACT TERMS AND CONDITIONS. TECHNICAL SPECIFICATIONS AND SCHEDULE OF ITEMS.
2. ALL DIMENSIONS ARE IN MM & ELEVATION IN METERS UNLESS STATED OTHERWISE.
3. ALL ELEVATION ARE REFERRED TO THE FINISHED FLOOR LEVEL OF POWER HOUSE BUILDING AS EL. 0.00 M WHICH CORRESPONDS TO RL.(+) 5.60 M.
4. FOR ALL OTHER NOTES REFER GENERAL NOTES FOR STRUCTURAL STEEL WORKS DRG. NO. MAITREE-00-UTX-LC-100200-PEM.
5. GRADE OF STEEL- E350. CONFIRMING TO SA/IS-2062.
6. FOR GROUTING OF BASE PLATE REF. DRG. NO. Maitree-00-UEF-LC-177042-ISG
7. CONNECTION DETAILS SHOWN ARE INDICATIVE ONLY. SIZE & THICKNESS OF GUSSETS. NO. & DIA. OF CONNECTION BOLTS ETC. SHALL BE SHOWN IN CORRESPONDING FABRICATION DRG.
8. GALVANIZING AND PAINTING OF HANDRAIL AS PER SPECS, NO WELDING IS ALLOWED AT SITE

REFERENCE:-

1. MECH DRG NO. : Maitree-00-HDA-LH-176066-ISG-0-GA _ MECHANICAL LOAD OF UEU-14
2. TP-14: STRUCTURAL GA PLAN DETAILS OF FLOORS ROOFS &BASE PLATE DETAILS Maitree-00-UEU-LC-177509-ISG-1

4	13.09.2019	PANCHU	RAVI PONNA	SCC	REVISED AS PER FICHTNER'S COMMENTS
3	21.08.2019	PANCHU	RAVI PONNA	SCC	REVISED AS PER FICHTNER'S COMMENTS
1	09.03.2019	PANCHU	RAVI PONNA	SCC	REVISED AS PER FICHTNER'S COMMENTS
	DATE	ALTERED	CHECKED	APPROVED	NOTE

PROJECT

2x660MW MAITREE SUPER THERMAL POWER PROJECT, RAMPAL, BANGLADESH (EPC MAIN PLANT PACKAGE)

OWNER CONSULTANT:

FICHTNER

M/s FICHTNER GmbH & Co KG,

Stuttgart,GERMANY

OWNER:

BANGLADESH-INDIA FRIENDSHIP POWER COMPANY (PVT.) LIMITED, BANGLADESH

BHARAT HEAVY ELECTRICALS LTD
INDUSTRIAL SYSTEMS GROUP
BANGALORE

	DATE	NAME
DRAWN BY	07.12.18	PANCHU
DESIGN BY	07.12.18	P.Verma
CHECKED BY	07.12.18	RAVI PONNA
APPROVED BY	07.12.18	SCC
SUPERSEDES:		
SUPERSEDED BY:		
SYSTEM:		

SCALE:

SHEET 2 OF 2

TITLE

TP-14: STRUCTURAL GA DETAILS OF ELEVATION & STAIRCASE

SIZE: A1 | PROJECT NO.: 421 | FILE:

ANNEX: | DRAWING NO.: Maitree-00-UEU-LC-177510-ISG | REV 4

FORM - 66.101

COPYRIGHT AND CONFIDENTIAL
The information on this document is the property of BHARAT HEAVY ELECTRICALS LIMITED
It must not be used in any way detrimental to the interest of the Company

DO NOT SCALE. IF IN DOUBT, ASK.

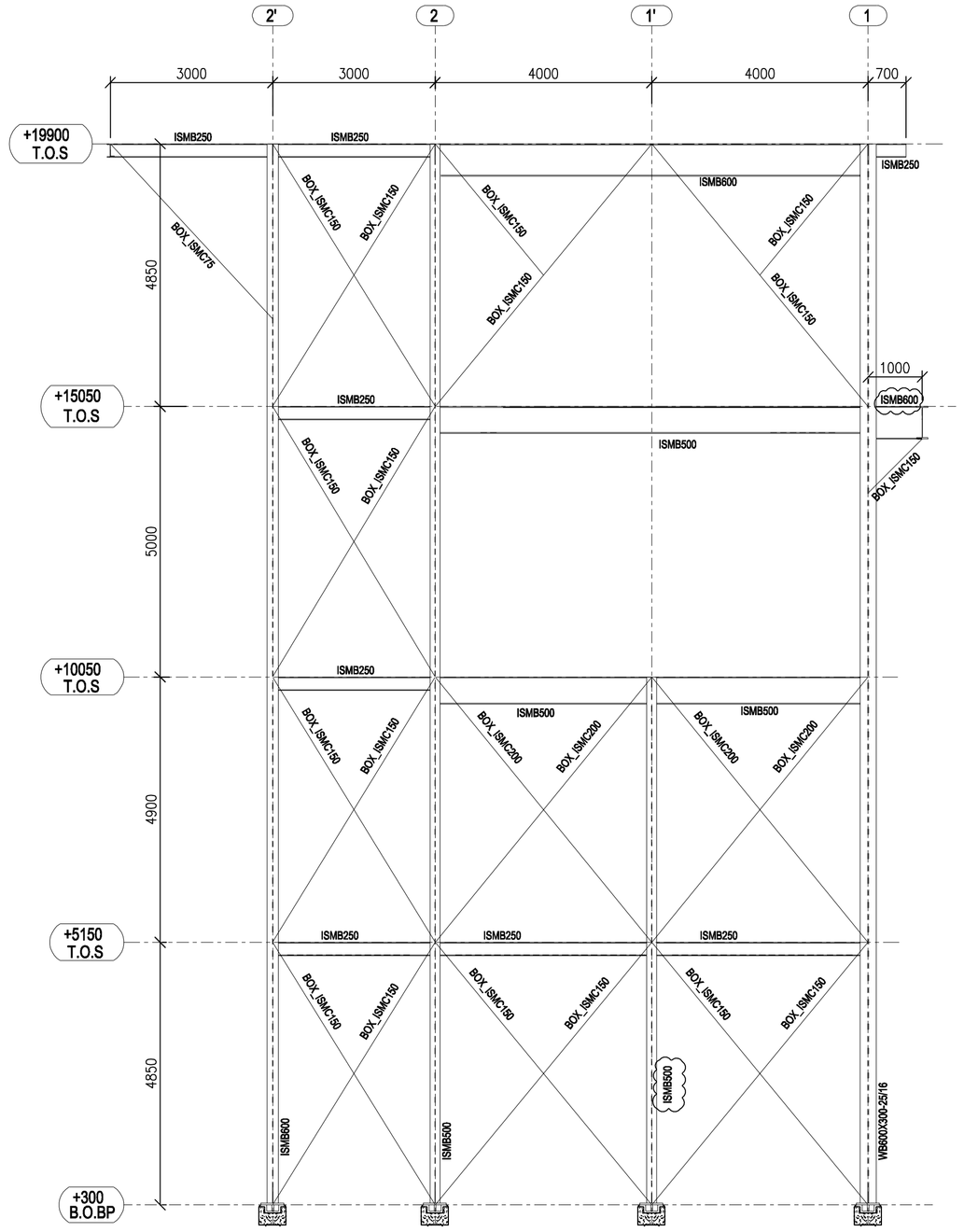

ELEVATION ALONG GRID @ A

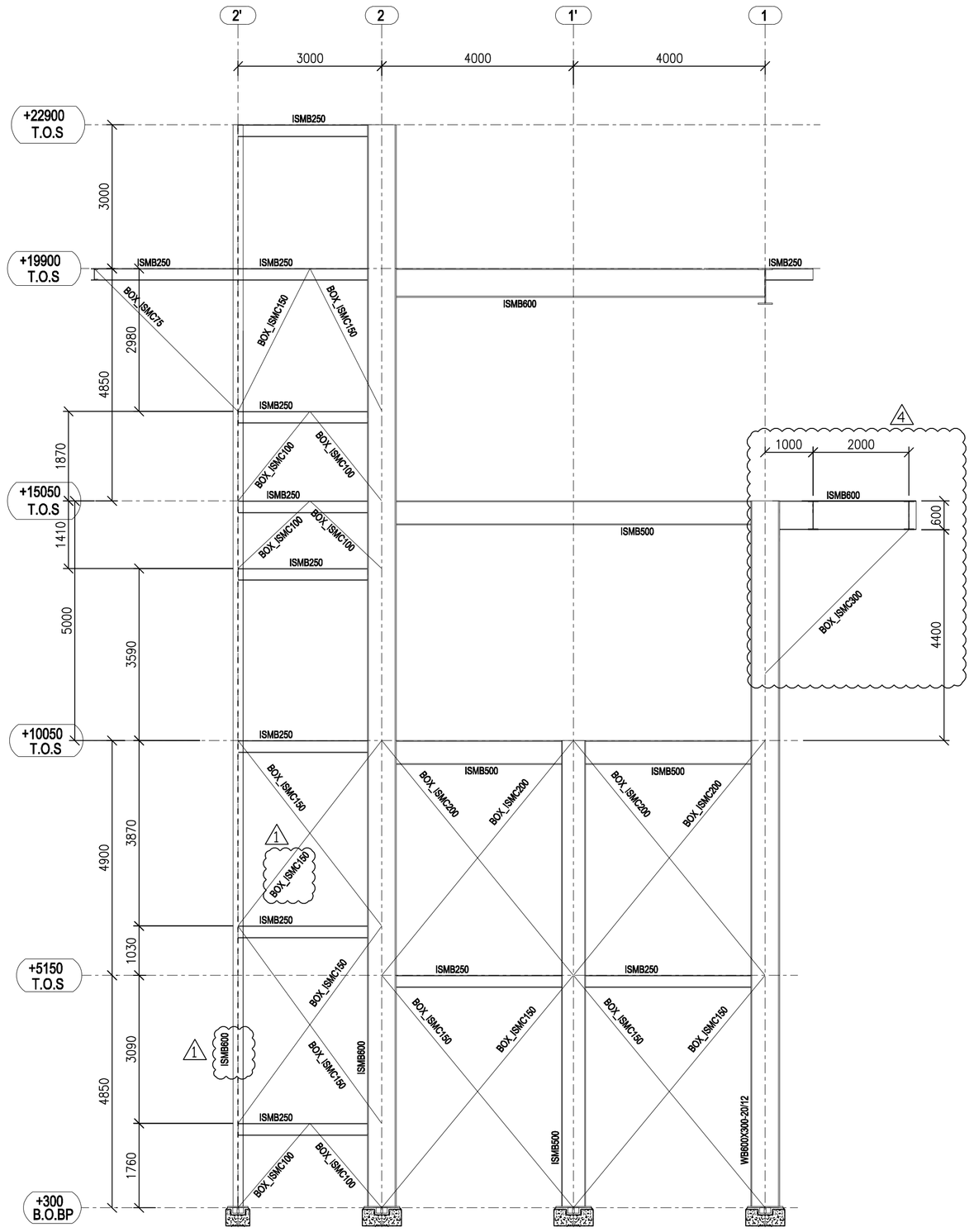

ELEVATION ALONG GRID @ A'

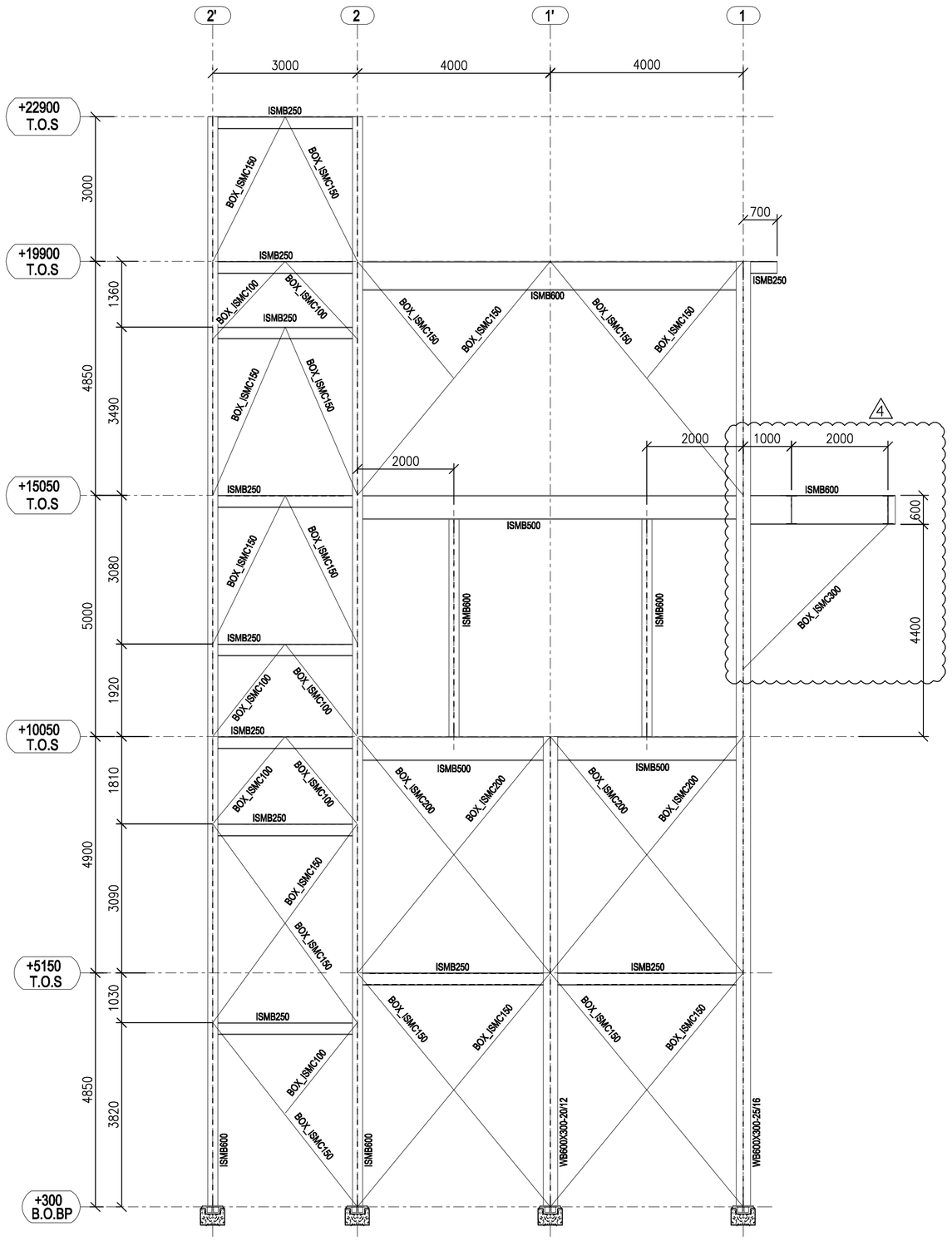

ELEVATION ALONG GRID @ B

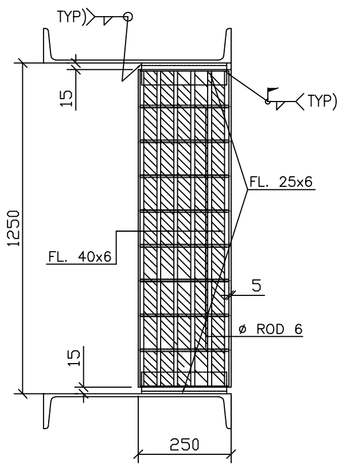

SECTION 2-2 3

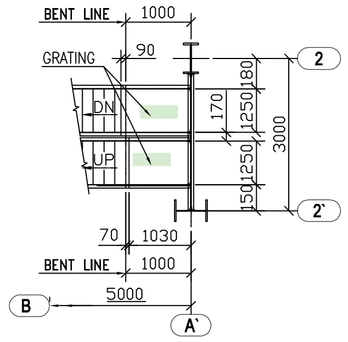

SECTION 3-3 3

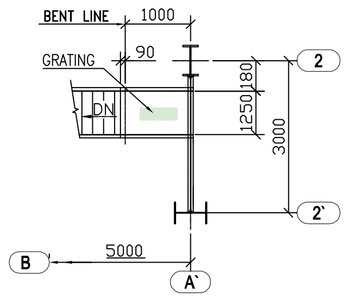

SECTION 7-7 3

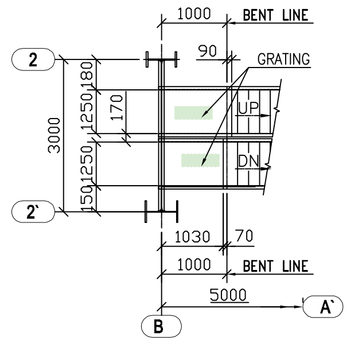

SECTION 6-6 3

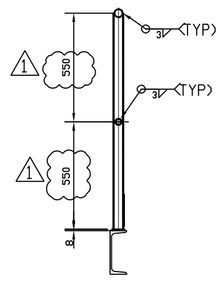

SECTION 5-5

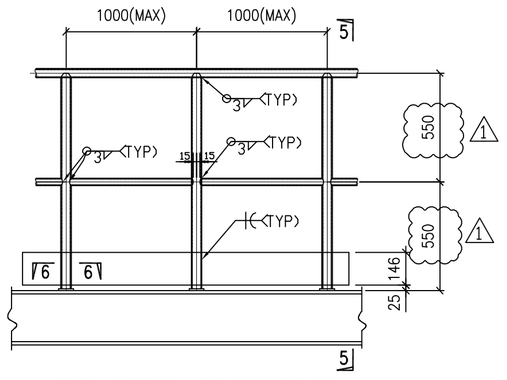

TYP. DETAIL OF HANDRAIL

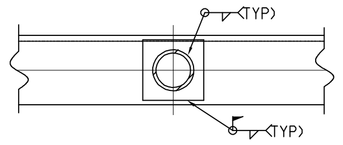

PLAN 6-6

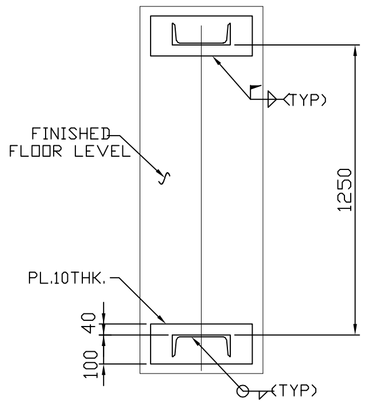

SECTION 1-1 3

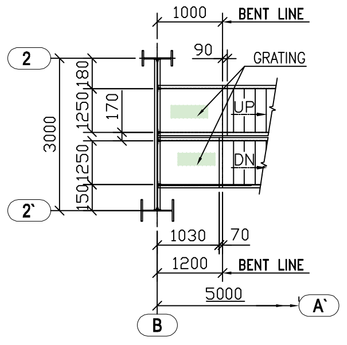

SECTION 4-4 3

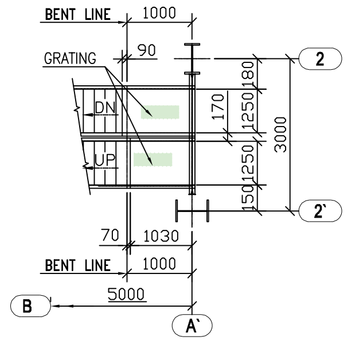

SECTION 5-5 3

NOTES:-

1. THIS DRAWING SHALL BE READ IN CONJUNCTION WITH CONTRACT TERMS AND CONDITIONS. TECHNICAL SPECIFICATIONS AND SCHEDULE OF ITEMS.
2. ALL DIMENSIONS ARE IN MM & ELEVATION IN METERS UNLESS STATED OTHERWISE.
3. ALL ELEVATION ARE REFERRED TO THE FINISHED FLOOR LEVEL OF POWER HOUSE BUILDING AS EL. 0.00 M WHICH CORRESPONDS TO RL.(+) 5.60 M.
4. FOR ALL OTHER NOTES REFER GENERAL NOTES FOR STRUCTURAL STEEL WORKS DRG. NO. MAITREE-00-UTX-LC-100200-PEM.
5. GRADE OF STEEL- E350. CONFIRMING TO SA/IS-2062.
6. FOR GROUTING OF BASE PLATE REF. DRG. NO. Maitree-00-UEF-LC-177042-ISG
7. CONNECTION DETAILS SHOWN ARE INDICATIVE ONLY. SIZE & THICKNESS OF GUSSETS. NO. & DIA. OF CONNECTION BOLTS ETC. SHALL BE SHOWN IN CORRESPONDING FABRICATION DRG.
8. GALVANIZING AND PAINTING OF HANDRAIL AS PER SPECS, NO WELDING IS ALLOWED AT SITE

REFERENCE:-

1. MECH DRG NO. : Maitree-00-HDA-LH-176066-ISG-0-GA _ MECHANICAL LOAD OF UEU-14
2. TP-14: STRUCTURAL GA PLAN DETAILS OF FLOORS ROOFS &BASE PLATE DETAILS Maitree-00-UEU-LC-177509-ISG-1

4	13.09.2019	PANCHU	RAVI PONNA	SCC	REVISED AS PER FICHTNER'S COMMENTS
3	21.08.2019	PANCHU	RAVI PONNA	SCC	REVISED AS PER FICHTNER'S COMMENTS
1	09.03.2019	PANCHU	RAVI PONNA	SCC	REVISED AS PER FICHTNER'S COMMENTS
	DATE	ALTERED	CHECKED	APPROVED	NOTE

PROJECT

2x660MW MAITREE SUPER THERMAL POWER PROJECT, RAMPAL, BANGLADESH (EPC MAIN PLANT PACKAGE)

OWNER CONSULTANT:

FICHTNER

M/s FICHTNER GmbH & Co KG,

Stuttgart,GERMANY

OWNER:

BANGLADESH-INDIA FRIENDSHIP POWER COMPANY (PVT.) LIMITED, BANGLADESH

BHARAT HEAVY ELECTRICALS LTD
INDUSTRIAL SYSTEMS GROUP
BANGALORE

	DATE	NAME
DRAWN BY	07.12.18	PANCHU
DESIGN BY	07.12.18	P.Verma
CHECKED BY	07.12.18	RAVI PONNA
APPROVED BY	07.12.18	SCC
SUPERSEDES:		
SUPERSEDED BY:		
SYSTEM:		

SCALE:

SHEET 2 OF 2

TITLE

TP-14: STRUCTURAL GA DETAILS OF ELEVATION & STAIRCASE

SIZE: A1 | PROJECT NO.: 421 | FILE:

ANNEX: | DRAWING NO.: Maitree-00-UEU-LC-177510-ISG | REV 4

FORM - 66.101